# Heath W3-AM

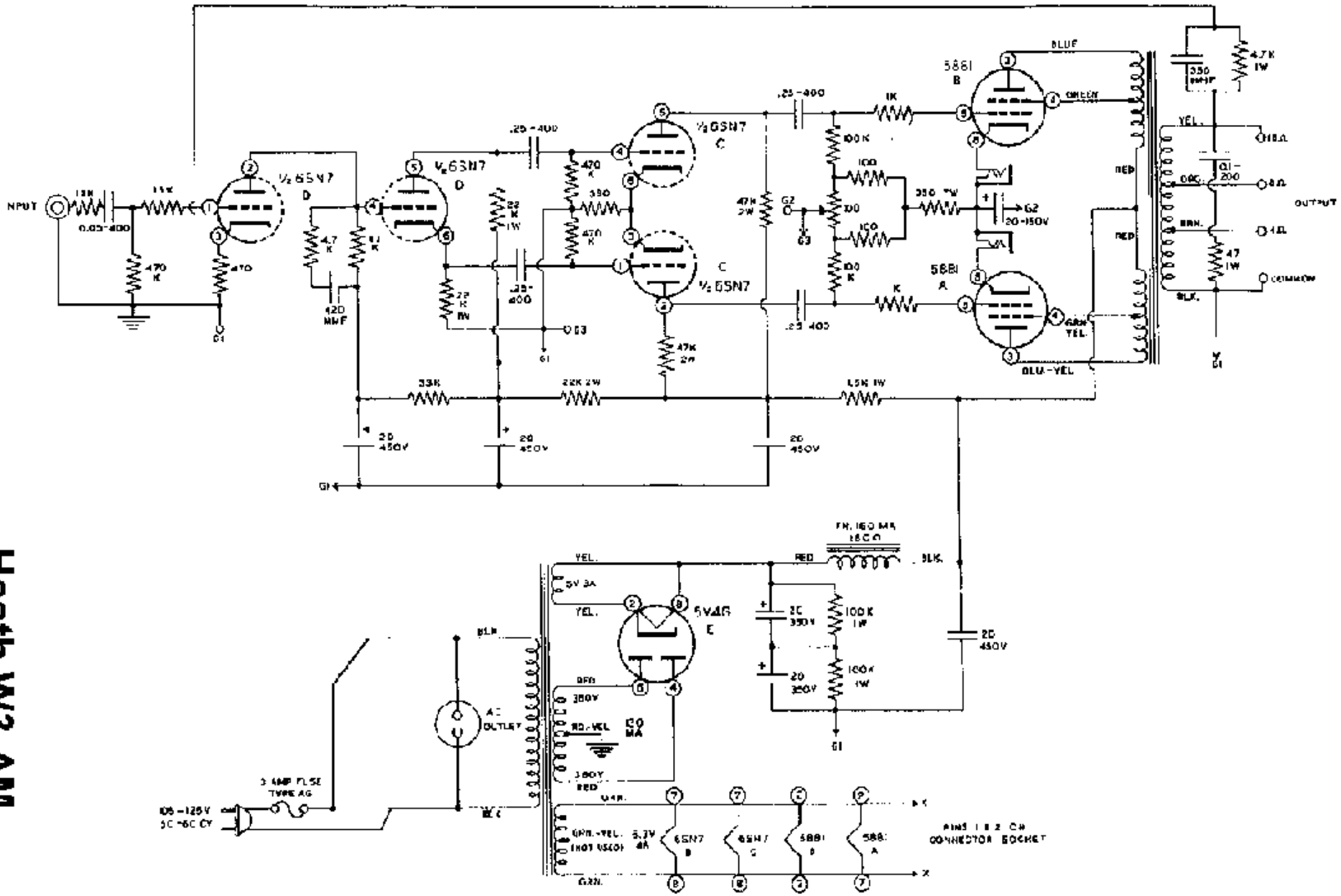


HEATHKIT WILLIAMSON-TYPE AMPLIFIER